LM4663 Boomer® Audio Power Amplifier Series 2 Watt Stereo Class D Audio Power Amplifier with Stereo Headphone Amplifier

Check for Samples: LM4663

FEATURES

- **Delta-Sigma Modulator.**
- **Two Stereo Input Selector.**
- **"Click and Pop" Suppression Circuitry.**
- **Micropower Shutdown Mode.**
- **24 Lead TSSOP Package (No Heatsink Required).**
- **Stereo Headphone Amplifier.**

APPLICATIONS

- **Portable Computers**
- **Desktop Computers**
- **Multimedia Monitors**

KEY SPECIFICATIONS

- **P_O at THD+N = 1%: 2.1 W (typ)**
- **THD+N at 1kHz at 1 Watt into 4Ω (Power Amp): 0.2% (typ)**
- **Efficiency at 2 Watt into 4Ω: 83% (typ)**
- **Efficiency at 250mW into 4Ω: 69% (typ)**
- **Total quiescent power supply current: 22mA (typ)**
- **Total shutdown power supply current: 2μA (typ)**
- **THD+N 1kHz, 20mW, 32Ω (Headphone): 0.15% (typ)**
- **Single supply range: 4.5V to 5.5 V**

DESCRIPTION

The LM4663 is a fully integrated single supply, high efficiency Class D audio power amplifier solution. The LM4663 utilizes a continuous time delta-sigma modulation technique that lowers output noise and THD when compared to conventional pulse width modulators.

The LM4663 also features a stereo headphone amplifier that delivers 80mW into a 32Ω headset with less than 0.5% THD. The LM4663 has two stereo inputs that can be selected to drive either the headphone amplifier or the Class D amplifier. All amplifiers are protected with thermal shutdown.

In standby mode, the LM4663 draws an extremely low 2μA supply current. With a 4Ω load, the IC's efficiency for a 250mW power level is 69%, reaching 83% at a power level of 2W. The IC features click and pop reduction circuitry that minimizes audible popping during device turn-on and turn-off. The LM4663 is available in a 24-lead TSSOP package, ideal for portable and desktop computer applications.

Please be aware that an important notice concerning availability, standard warranty, and use in critical applications of Texas Instruments semiconductor products and disclaimers thereto appears at the end of this data sheet.

All trademarks are the property of their respective owners.

PRODUCTION DATA information is current as of publication date. Products conform to specifications per the terms of the Texas Instruments standard warranty. Production processing does not necessarily include testing of all parameters.

Copyright © 2000–2013, Texas Instruments Incorporated

These devices have limited built-in ESD protection. The leads should be shorted together or the device placed in conductive foam during storage or handling to prevent electrostatic damage to the MOS gates.

Block Diagram

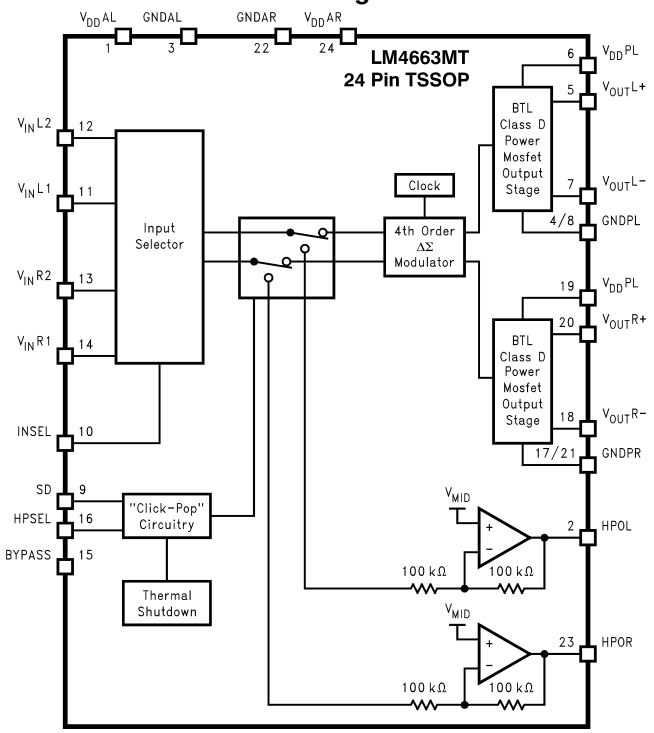

TSSOP Package
Top View

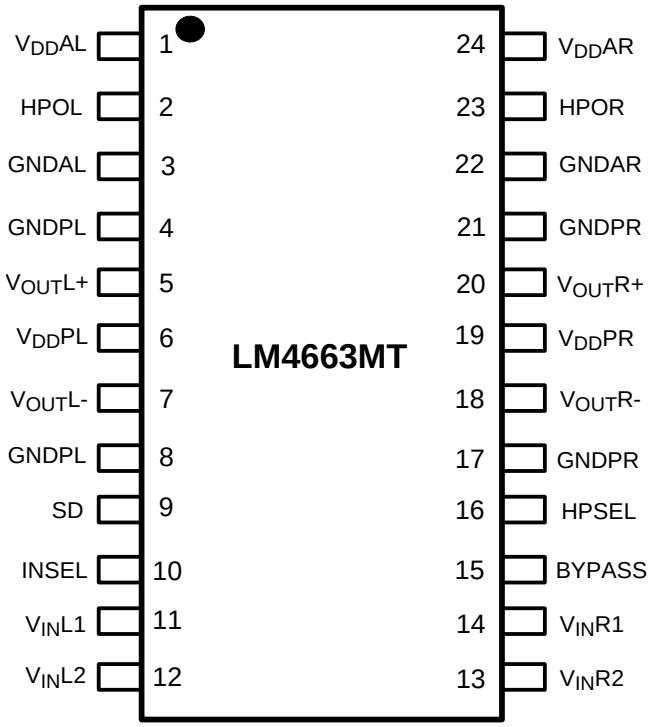

See Package Number PW0024A

Copyright © 2000–2013, Texas Instruments Incorporated

ABSOLUTE MAXIMUM RATINGS[1][2]

Supply Voltage		6.0V
Input Voltage		−0.3V to V_{DD} +0.3V
Power Dissipation[3]		Internally Limited
Load Resistance		2.5Ω, min
ESD Susceptibility[4]		2000V
Pins 5, 7, 18, 20		600V
ESD Susceptibility[5]		200V
Pins 5, 7, 18, 20		50V
Junction Temperature[6]		150°C
Storage Temperature		−65°C ≤ T_A ≤ 150°C
Soldering Information		
TSSOP Package	Vapor Phase (60 sec.)	215°C
	Infrared (15 sec.)	220°C

(1) "Absolute Maximum Ratings" indicate limits beyond which damage to the device may occur. "Operating Ratings" indicate conditions for which the device is functional, but do not specify performance limits. "Electrical Characteristics" state DC and AC electrical specifications under particular test conditions which ensure specific performance limits. This assumes that the device is within the Operating Ratings. Specifications are not ensured for parameters where no limit is given, however, the typical value is a good indication of device performance.
(2) If Military/Aerospace specified devices are required, please contact the Texas Instruments Sales Office/ Distributors for availability and specifications.
(3) For operating at case temperatures above 25°C, the device must be derated based on a 150°C maximum junction temperature and a thermal resistance of θ_{JA} = 80°C/W (junction to ambient).
(4) Human body model, 100pF discharged through a 1.5kΩ resistor.
(5) Machine Model 220pF−240pF discharged through all pins.
(6) The operating junction temperature maximum is 150°C.

OPERATING RATINGS[1]

Temperature Range (T_{MIN} ≤ T_A ≤ T_{MAX})		−40°C ≤ T_A ≤ +85°C
Supply Voltage		4.5V ≤ V_{DD} ≤ 5.5V
Thermal Resistance (TSSOP Package)	θ_{JA}	80°C/W
	θ_{JC}	20°C/W

(1) All voltages are measured with respect to the ground pin, unless otherwise specified.

ELECTRICAL CHARACTERISTICS[1] [2]

The following specifications apply for V_{DD} = 5V, R_L = 4Ω, LC filter values as shown in Figure 8, unless otherwise specified. Limits apply for T_A = 25°C.

Symbol	Parameter	Conditions	LM4663			Units
			Typical	Max	Min	
V_S	Operating Supply Voltage Range		5	5.5	4.5	V
I_S	Quiescent Power Supply Current, Class D Mode	V_{IN} = 0V_{RMS}, V_{HPSEL} = 0V	22	35		mA
I_S	Quiescent Power Supply Current, Headphone Mode	V_{IN} = 0V_{RMS}, V_{HPSEL} = V_S	5	10		mA
I_{SD}	Quiescent Power Supply Current, Shutdown Mode	V_{SD} = 5V	2			µA
R_{IN}	Input Resistance in Both Modes		20			kΩ
V_{IH}	Minimum High Level Input Voltage	Shutdown Pin & Input Select Pin			4.5	V
V_{IL}	Maximum Low Level Input Voltage	Shutdown Pin & Input Select Pin		0.5		V
V_{IH}	Minimum High Level Input Voltage	Headphone Select Pin			4.5	V
V_{IL}	Maximum Low Level Input Voltage	Headphone Select Pin		0.5		V

(1) All voltages are measured with respect to the ground pin, unless otherwise specified.
(2) Limits are to AOQL (Average Outgoing Quality Level).

Copyright © 2000–2013, Texas Instruments Incorporated

ELECTRICAL CHARACTERISTICS[1] [2] (continued)

The following specifications apply for V_{DD} = 5V, R_L = 4Ω, LC filter values as shown in Figure 8, unless otherwise specified. Limits apply for T_A = 25°C.

Symbol	Parameter	Conditions	LM4663			Units
			Typical	Max	Min	
Power Amplifiers						
P_OR	Output Power, Per Channel	THD+N ≤ 1%, f_{IN} = 1kHz	2.1			W
P_{D1}	Power Dissipation	P_O = 2W/Chan, f_{IN} = 1kHz	0.82			W
P_{D2}	Power Dissipation	P_O = 1W/Chan, f_{IN} = 1kHz	0.49			W
P_{D3}	Power Dissipation	P_O = .25W/Chan, f_{IN} = 1kHz	0.23			W
E_{FF1}	Efficiency	P_O = 2W/Chan, f_{IN} = 1kHz	83			%
E_{FF2}	Efficiency	P_O = 1W/Chan, R_L = 8Ω, f_{IN} = 1kHz	85		80	%
E_{FF3}	Efficiency	P_O = .25W/Chan, f_{IN} = 1kHz	69			%
THD+N	Harmonic Distortion + Noise	P_O = 1W/Chan, f_{IN} = 1kHz	0.2			%
V_{NOISE}	Output Noise Voltage, RMS. A−Weighted	R_{SOURCE} = 50Ω, C_{IN} = 1µF, BW = 8Hz to 22kHz	200			µV
PSRR	Power Supply Rejection Ratio (Referred to Input)	200mV, 1kHz, V_{IN} = 0	44			dB
A_V	Voltage Gain	1kHz, V_{IN} = 100mV, R_L = 4Ω	13			dB
A_VL-A_VR	Stereo Gain Tracking	1kHz, V_{IN} = 100mV, R_L = 4Ω	0.1			dB
Headphone Amplifiers						
P_O	Power Out Per Channel	THD+N ≤ 1%, R_L = 32Ω, f_{IN} = 1kHz	80		60	mW
THD+N	Distortion + Noise	P_O = 20mW, R_L = 32Ω, f_{IN} = 1kHz	0.15			%
V_{NOISE}	Output Noise Voltage, RMS	R_{IN} = 50Ω, C_{IN} = 1µF, BW = 8Hz to 22kHz	30			µV
PSRR	Power Supply Rejection Ratio (Referred to Input)	200mV, 1kHz, V_{IN} = 0, R_L = 32Ω	44			dB
A_V	Voltage Gain	1kHz, V_{IN} = 100mV, R_L = 32Ω	5.5			dB
A_VL-A_VR	Stereo Gain Tracking	1kHz, V_{IN} = 100mV, R_L = 32Ω	0.1			dB

Copyright © 2000–2013, Texas Instruments Incorporated

TYPICAL PERFORMANCE CHARACTERISTICS

Efficiency vs Output Power

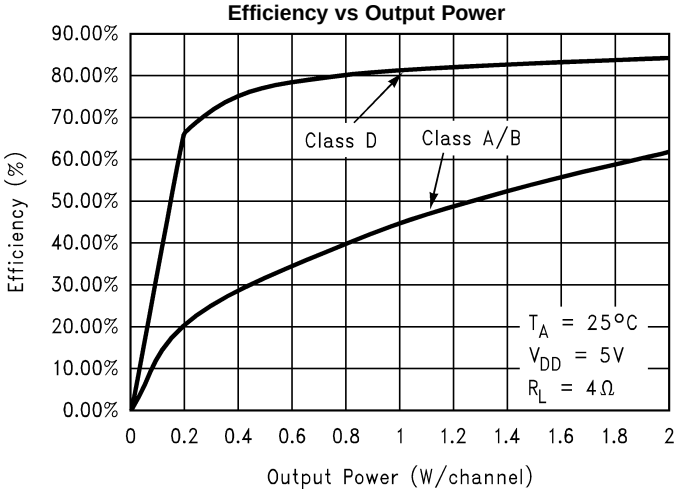

Figure 1.

Power Dissipation vs Output Power

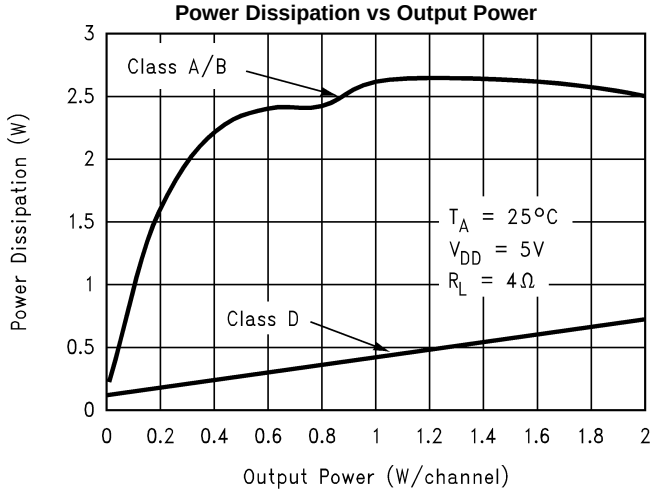

Figure 2.

Class D Amplifier
In-Band Output Spectrum

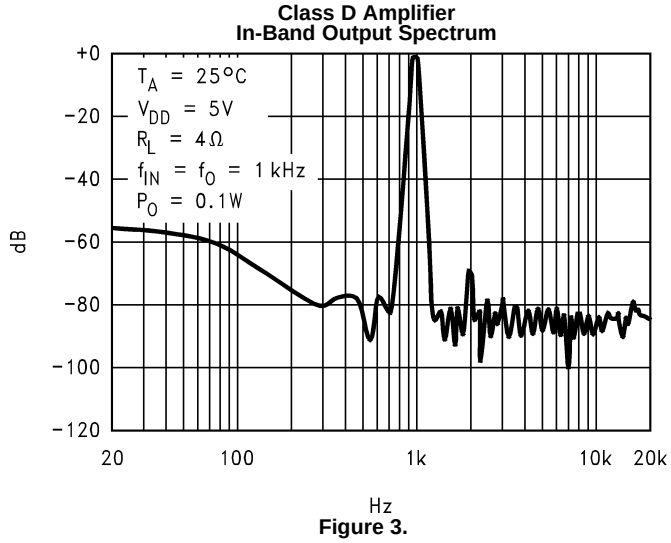

Figure 3.

Class D Amplifier
In-Band Output Spectrum

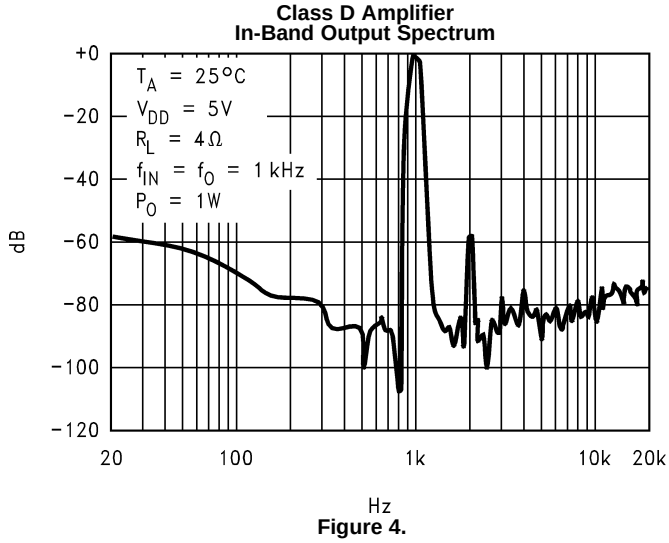

Figure 4.

Class D Amplifier
THD + N vs Power vs Frequency

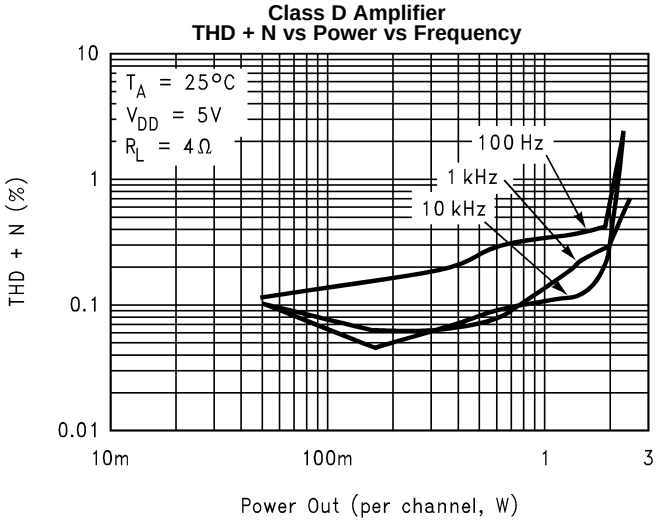

Figure 5.

TYPICAL PERFORMANCE CHARACTERISTICS (continued)

Class D Amplifier
THD + N vs Frequency vs Power

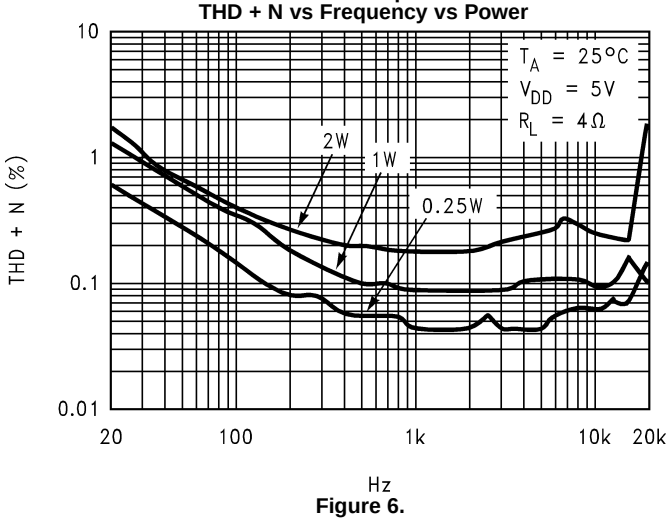

Figure 6.

Headphone THD + N vs Frequency vs Power

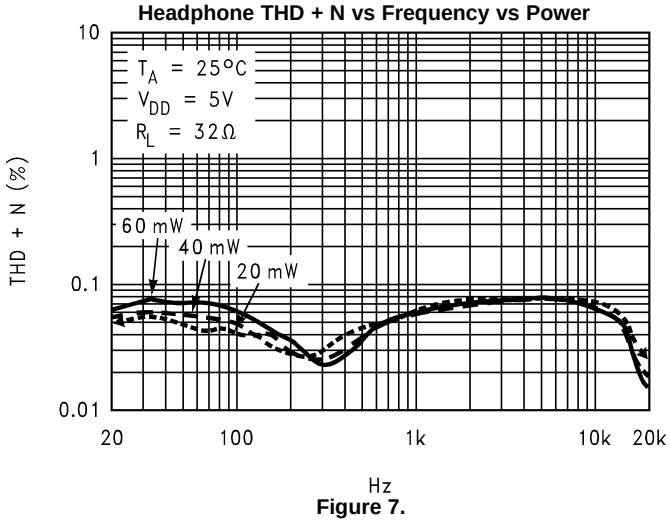

Figure 7.

Copyright © 2000–2013, Texas Instruments Incorporated

APPLICATIONS INFORMATION

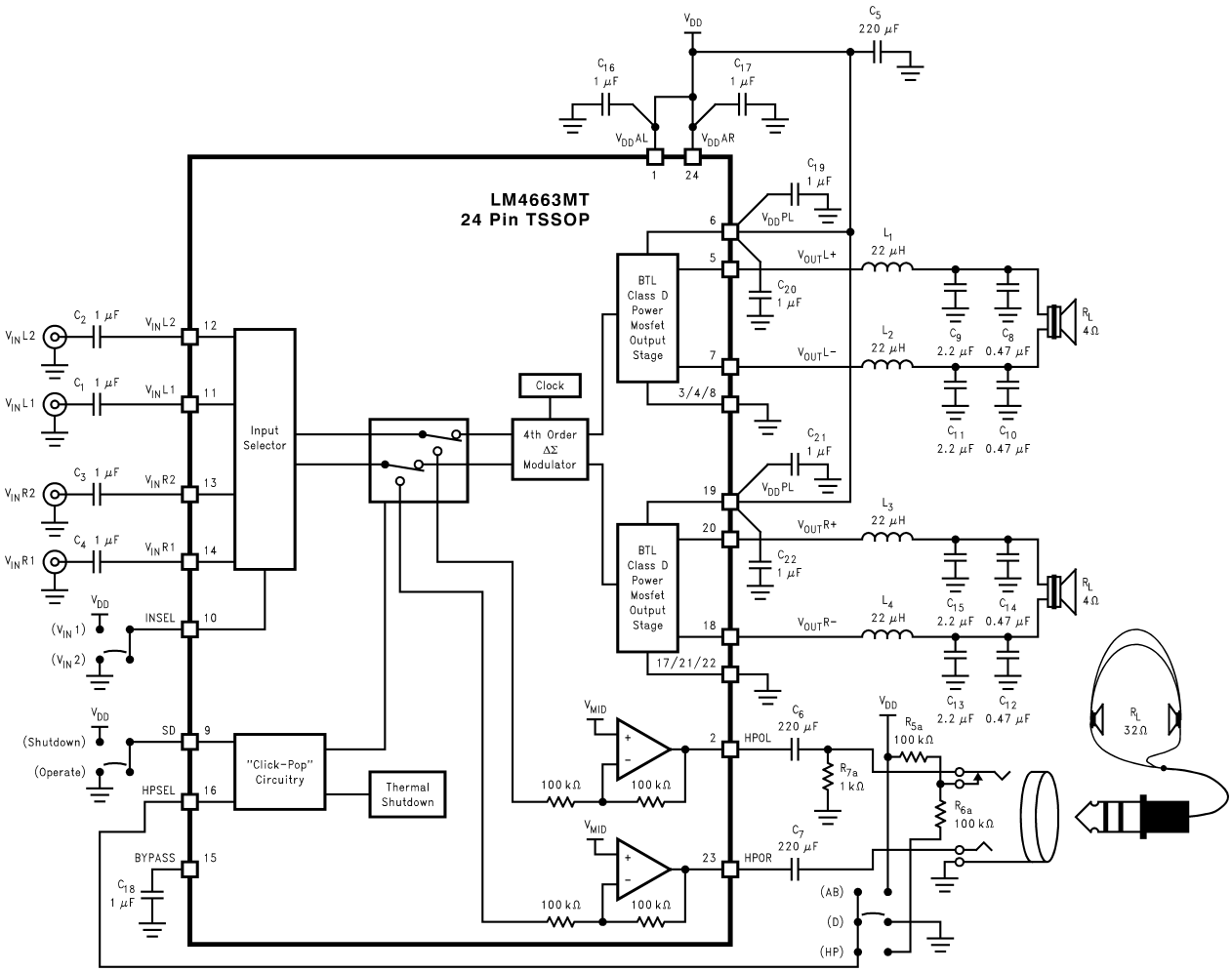

Operating on a single 5V supply, this recommended application circuit is a complete solution with 2W Class D amplifiers that drive 4Ω speakers and 80mW amplifiers drive 32Ω headphones.

Figure 8.

SUGGESTED APPLICATION CIRCUIT

The LM4663 achieves its specified performance using the recommended application circuit shown in Figure 8. The circuit provides full access to the stereo 2W/channel power amplifiers and the 80mW/channel stereo headphone amplifier. The HPSELECT (headphone select) input is controlled by a stereo mini-plug/jack with additional control contact. Other applications of this device may use external generated logic signals to control this function.

CONTROL PINS

The LM4663 has three control pins: INSEL, SD, and HPSEL. The INSEL pin is used to select between the two stereo inputs, V_{IN1} and V_{IN2}. Connecting the INSEL pin to the positive supply selects V_{IN1}, whereas pulling it to ground selects V_{IN2}. Micropower shutdown operation is selected by pulling the SD to the positive supply. Applying the positive supply to the HPSEL pin selects the headphone amplifiers and grounding the HPSEL pin selects the Class D amplifiers. Table 1 is a summary of the function selected when applying ground or V_{DD} to the control pins.

Copyright © 2000–2013, Texas Instruments Incorporated

Table 1. Function selected when applying V_{DD} or GND to the INSEL, SD, and HPSEL control pins.

Control Function	Pin	Apply GND	Apply V_{DD}
INSEL	10	V_{IN2} L & R	V_{IN1} L & R
SD	9	Full power operation	Micropower shutdown
HPSEL	16	Deactivate headphone amps and activate Class D amps	Deactivate Class D amps and activate headphone amps

OUTPUT FILTERS

The LM4663's 2W power amplifiers use a Class D switching topology that requires a filter between the amplifier outputs and the load. The balanced, L-C filters shown in Figure 8 use component values recommended for a maximally flat magnitude in the pass-band and a cut-off frequency of 18kHz with a load impedance of 4Ω. We do not recommend omitting the filter because considerable out-of-band energy is present in the Class D output waveform. This energy would be dissipated in the load impedance's resistive component, which diminishes efficiency.

BYPASS PIN CAPACITOR

In order to achieve the largest unclipped output voltage swing, a DC reference voltage for the circuit is derived internally by a resistor divider from the power supply voltage. To reduce sensitivity to audio frequency variations on the reference voltage, a de-coupling capacitor is recommended between the BYPASS pin and the best available AC ground reference. This is typically the shield connection from the signal source. A poor choice is the power ground because considerable current flows from the LM4663 through pins 4,8,17, and 21 to the power supply return. This current is rich in harmonic frequencies related to the input audio frequency. These harmonics can easily couple into the signal path by sharing power ground conductors with the bypass capacitor connection. The result is increased THD.

MINIMUM LOAD RESISTANCE

As specified in the Absolute Maximum Ratings, the minimum load resistance supported by the LM4663 at the output of the filters is 2.5 Ohms. Loads (usually loudspeakers) should be tested over the audio band to determine whether or not there are resonant points of diminished impedance less than this limit.

OUTPUT FILTER COMPONENTS

Table 2 shows suggested standard values of the capacitor (C) and the inductor (L) used in Figure 8's output filter for 4Ω and 8Ω loads. The bandwidth for each case is typically 18kHz.

Table 2. Output filter component values for different load resistance.

Load Resistance (Ω)	Capacitor C (μF)	Inductor L (μH)
4	2	22
8	1	44

SHORT CIRCUIT TOLERANCE

The LM4663, when used in the recommended application circuit, is tolerant of limited duration short circuit connections between the filtered positive and negative outputs. Shorts from either output to ground or supply voltage, or from the unfiltered outputs to any other low impedance node can result in permanent damage to the IC.

START-UP CURRENT

The LM4663 exhibits abnormally high quiescent current drain when the supply voltage is below the specified operating range of 4.5 to 5.5V. It is, therefore, recommended that the IC be initially powered up in the shutdown mode (SD = V_{DD}). Normal application of power from laboratory bench supplies is not usually a problem unless the current limit of the supply is set too low (<1A); however, some applications have a much lower current capability (such as USB applications). In these cases power must be applied with shutdown asserted and switched to the operating mode after power is present and settled. An external circuit that provides this condition automatically is given in Figure 9, and is recommended for those current-critical applications.

 Copyright © 2000–2013, Texas Instruments Incorporated

PRINTED CIRCUIT BOARD LAYOUT

Figures (11) through (15) show the layout of a recommended four-layer PC board that is optimized for the LM4663 and associated external components. This layout emphasizes short connections between the power reservoir capacitors near the power amp outputs and their associated pins. Short connections reduce inductance and EMI radiation from the output switching currents. Also, the distance from the switching outputs to the filter inductors is similarly minimized to reduce radiated noise. Table 4 is the recommended circuit's bill-of-materials (BOM). Figure 15 is a photograph of the recommended four-layer PC board.

The board is designed for use with an external 5V supply, 4Ω speakers, and 32Ω headphones. Apply the supply voltage to the V_{DD} pad and ground to the GND pad. Connect the left channel speaker between the Lout+ and Lout− pads and the right channel speaker between the Rout+ and Rout− pads. Connect the left and right headphone speakers to the HPL and HPR pads, respectively. The board has two sets of HPL and HPR pads. Use the set found across the top edge for a headphone jack like that shown in Figure 8. The other set found along the right edge can be used for a three terminal headphone jack. Ensure that a speaker's + terminal is connected to an amplifier's + output. This preserves the phase relationship between the left and right channels.

The board accepts two stereo inputs. Apply channel 1's right and left input signals to the Rin1 and Lin1 pads, respectively. Apply channel 2's right and left input signals to the Rin2 and Lin2 pads, respectively.

The board's bottom edge has seven jumpers. From left to right, these jumpers select micropower shutdown, input channel, headphone amplifier, Class D amplifier, and headphone amplifier when plugging in headphones. Table 3 is a guide for selecting the various functions.

Table 3. These are the functions selected by the jumpers on the recommended PC board.

Jumper	Function
SD-L	**Shorting** selects normal operation. **SD-H Jumper is open.**
SD-H	**Shorting** activates shutdown: micropower operation. **SD-L Jumper is open.**
INSEL-L	**Shorting** selects stereo input 2. **INSEL-H Jumper is open.**
INSEL-H	**Shorting** selects stereo input 1. **INSEL-L Jumper is open.**
Class AB	**Shorting** activates the headphone amplifier and deactivates the Class D amplifier. **Class D and HP jack jumpers are open**
Class D	**Shorting** activates the Class D amplifier and deactivates the headphone amplifier. **Class AB and HP jack jumpers are open**
HP Jack	**Shorting** allows the act of plugging in headphones to activate the headphone amplifier and deactivate the Class D amplifier. Removing headphones restores Class D amplifier operation and deactivates the headphone amplifier. **Class AB and Class D jumpers are open.** (Requires the use of a headphone jack like that shown in Figure 8.)

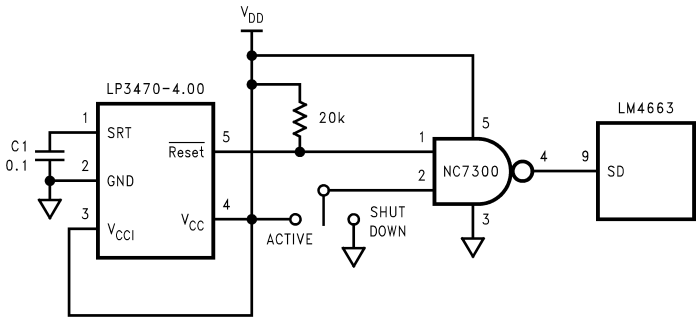

At power-up, the LP3740 forces the LM4663 into shutdown, which prevents abnormal quiescent current flow through the amplifier. Once V_{CC} rises above 4V and after a 200ms delay set by C1, normal amplifier operation is restored.

Figure 9.

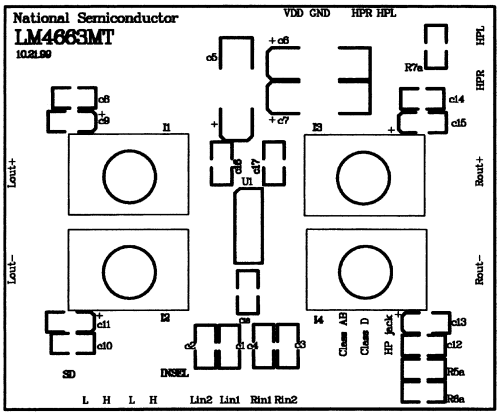

Figure 10. Recommended PC board layout: Component side silkscreen

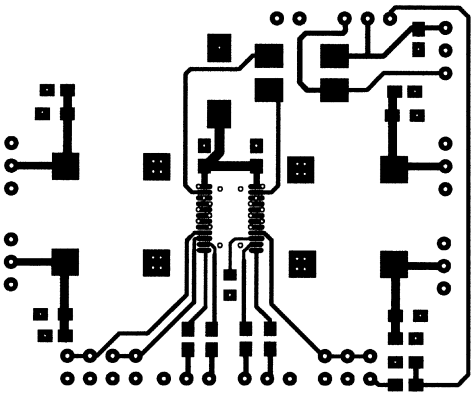

Figure 11. Recommended PC board layout: Component side layout

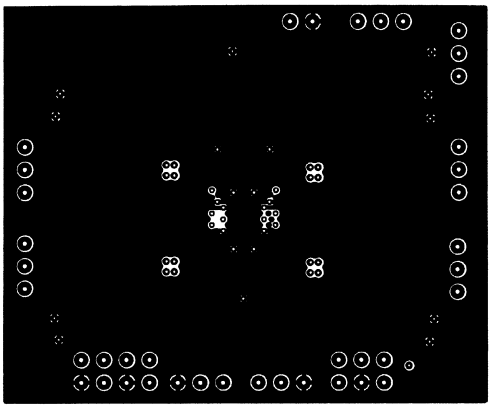

Figure 12. Recommended PC board layout: Inner Layer ground plane layout

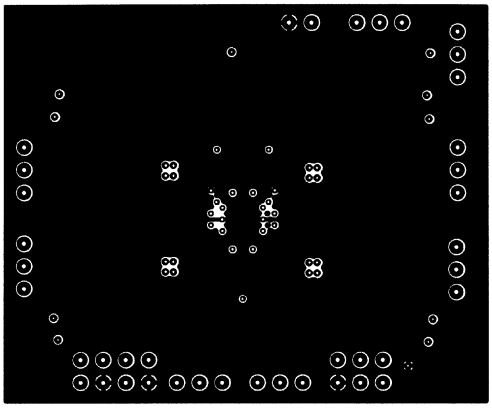

Figure 13. Recommended PC board layout: Inner Layer supply plane layout

Copyright © 2000–2013, Texas Instruments Incorporated

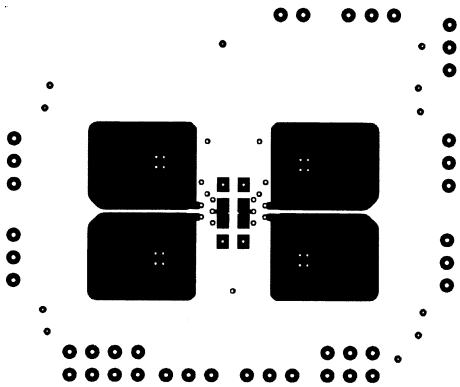

Figure 14. Recommended PC board layout: Bottom side layout

Table 4. Suggested PC Board Bill-of-Materials for recommended PC boards. (See Figures (9) and (11) through (15))

Component	Footprint	Type	Value	Size	Comment
C1-C4	0805	SMD/Top	1µF		
C5-C7	7243	SMD/Top	220µF	"D"	Tan./10V
C8,C10,C12,C14	0805	SMD/Top	.47µF		
C9,C11,C13,C15	3216	SMD/Top	2.2µF	"A"	Tan.
C16-C18	0805	SMD/Top	1µF		
C19-C22	0805	SMD/Bot	1µF		No Silkscreen
R5a,R6a	0805	SMD	100k		
R7a	0805	SMD	1k		
L1-L4	D03316P−223	SMD	22µH		Coilcraft: (847)639−6400 http://www.coilcraft.com
U1	LM4663MT	TSSOP		24 Pin	2W Class D amplifier

Copyright © 2000–2013, Texas Instruments Incorporated

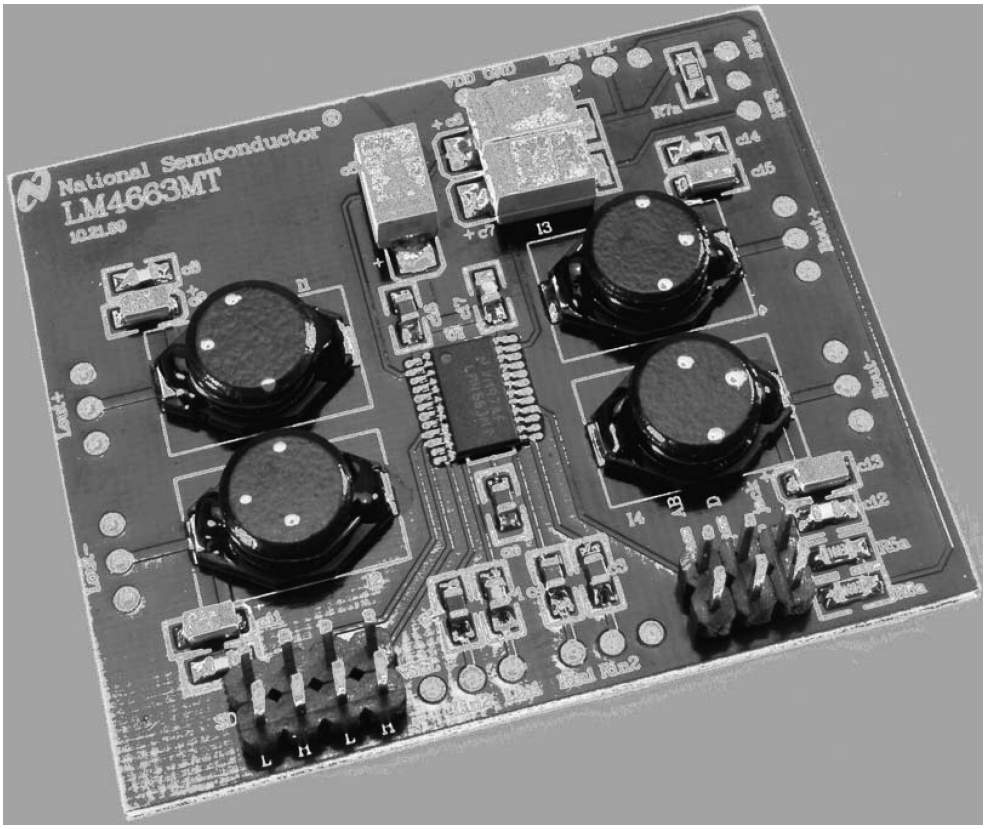

Figure 15. Recommended LM4663 PC Board

REVISION HISTORY

Rev	Date	Description
1.1	04/11/06	Revised Connection Diagram
F	04/09/13	Changed layout of National Data Sheet to TI format.

Copyright © 2000–2013, Texas Instruments Incorporated

IMPORTANT NOTICE

Texas Instruments Incorporated and its subsidiaries (TI) reserve the right to make corrections, enhancements, improvements and other changes to its semiconductor products and services per JESD46, latest issue, and to discontinue any product or service per JESD48, latest issue. Buyers should obtain the latest relevant information before placing orders and should verify that such information is current and complete. All semiconductor products (also referred to herein as “components”) are sold subject to TI’s terms and conditions of sale supplied at the time of order acknowledgment.

TI warrants performance of its components to the specifications applicable at the time of sale, in accordance with the warranty in TI’s terms and conditions of sale of semiconductor products. Testing and other quality control techniques are used to the extent TI deems necessary to support this warranty. Except where mandated by applicable law, testing of all parameters of each component is not necessarily performed.

TI assumes no liability for applications assistance or the design of Buyers’ products. Buyers are responsible for their products and applications using TI components. To minimize the risks associated with Buyers’ products and applications, Buyers should provide adequate design and operating safeguards.

TI does not warrant or represent that any license, either express or implied, is granted under any patent right, copyright, mask work right, or other intellectual property right relating to any combination, machine, or process in which TI components or services are used. Information published by TI regarding third-party products or services does not constitute a license to use such products or services or a warranty or endorsement thereof. Use of such information may require a license from a third party under the patents or other intellectual property of the third party, or a license from TI under the patents or other intellectual property of TI.

Reproduction of significant portions of TI information in TI data books or data sheets is permissible only if reproduction is without alteration and is accompanied by all associated warranties, conditions, limitations, and notices. TI is not responsible or liable for such altered documentation. Information of third parties may be subject to additional restrictions.

Resale of TI components or services with statements different from or beyond the parameters stated by TI for that component or service voids all express and any implied warranties for the associated TI component or service and is an unfair and deceptive business practice. TI is not responsible or liable for any such statements.

Buyer acknowledges and agrees that it is solely responsible for compliance with all legal, regulatory and safety-related requirements concerning its products, and any use of TI components in its applications, notwithstanding any applications-related information or support that may be provided by TI. Buyer represents and agrees that it has all the necessary expertise to create and implement safeguards which anticipate dangerous consequences of failures, monitor failures and their consequences, lessen the likelihood of failures that might cause harm and take appropriate remedial actions. Buyer will fully indemnify TI and its representatives against any damages arising out of the use of any TI components in safety-critical applications.

In some cases, TI components may be promoted specifically to facilitate safety-related applications. With such components, TI’s goal is to help enable customers to design and create their own end-product solutions that meet applicable functional safety standards and requirements. Nonetheless, such components are subject to these terms.

No TI components are authorized for use in FDA Class III (or similar life-critical medical equipment) unless authorized officers of the parties have executed a special agreement specifically governing such use.

Only those TI components which TI has specifically designated as military grade or “enhanced plastic” are designed and intended for use in military/aerospace applications or environments. Buyer acknowledges and agrees that any military or aerospace use of TI components which have ***not*** been so designated is solely at the Buyer's risk, and that Buyer is solely responsible for compliance with all legal and regulatory requirements in connection with such use.

TI has specifically designated certain components as meeting ISO/TS16949 requirements, mainly for automotive use. In any case of use of non-designated products, TI will not be responsible for any failure to meet ISO/TS16949.

Products		**Applications**	
Audio	www.ti.com/audio	Automotive and Transportation	www.ti.com/automotive
Amplifiers	amplifier.ti.com	Communications and Telecom	www.ti.com/communications
Data Converters	dataconverter.ti.com	Computers and Peripherals	www.ti.com/computers
DLP® Products	www.dlp.com	Consumer Electronics	www.ti.com/consumer-apps
DSP	dsp.ti.com	Energy and Lighting	www.ti.com/energy
Clocks and Timers	www.ti.com/clocks	Industrial	www.ti.com/industrial
Interface	interface.ti.com	Medical	www.ti.com/medical
Logic	logic.ti.com	Security	www.ti.com/security
Power Mgmt	power.ti.com	Space, Avionics and Defense	www.ti.com/space-avionics-defense
Microcontrollers	microcontroller.ti.com	Video and Imaging	www.ti.com/video
RFID	www.ti-rfid.com		
OMAP Applications Processors	www.ti.com/omap	**TI E2E Community**	e2e.ti.com
Wireless Connectivity	www.ti.com/wirelessconnectivity		

Mailing Address: Texas Instruments, Post Office Box 655303, Dallas, Texas 75265
Copyright © 2013, Texas Instruments Incorporated